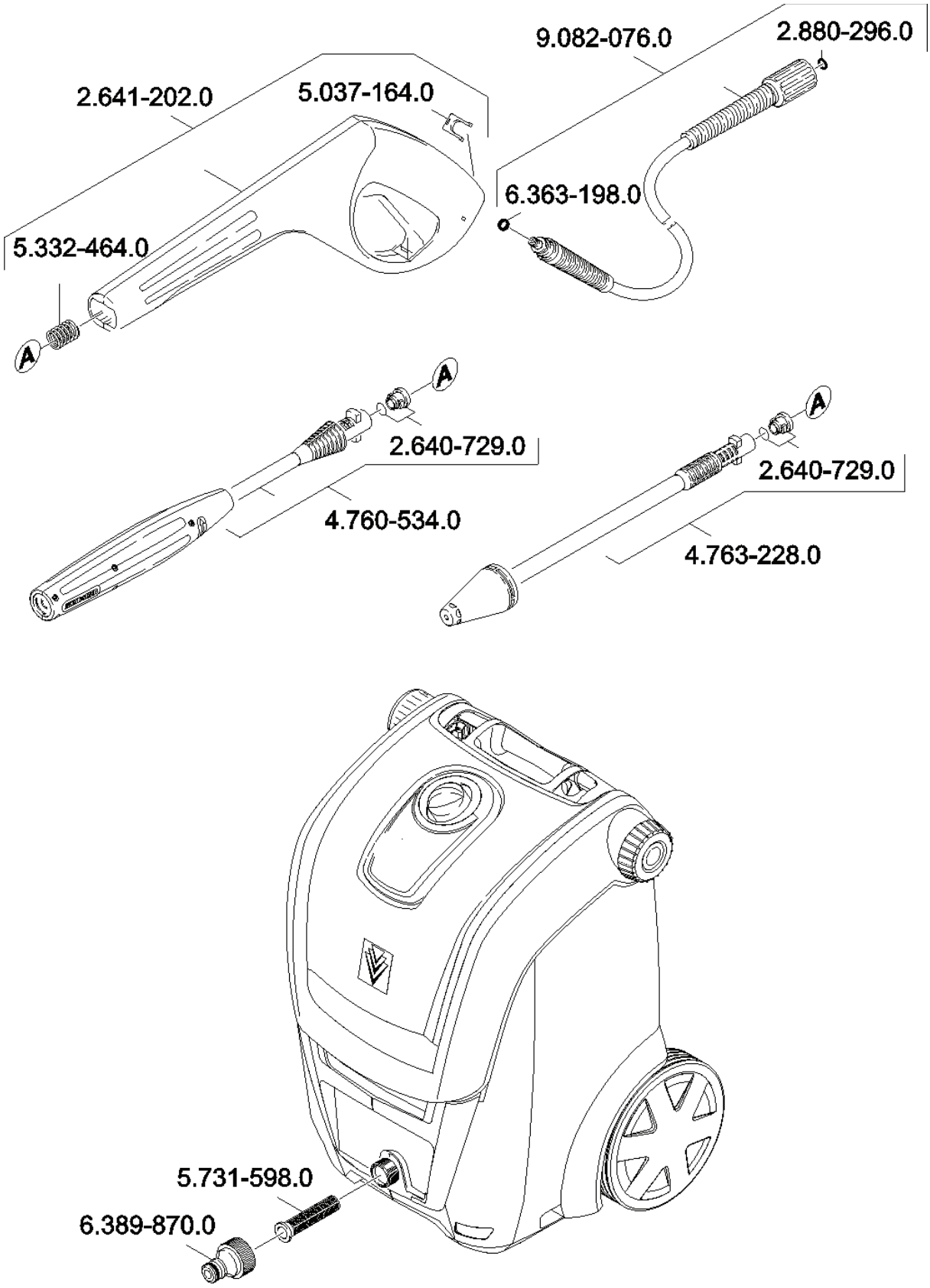KÄRCHER 3.96 M Plus
1.636-100